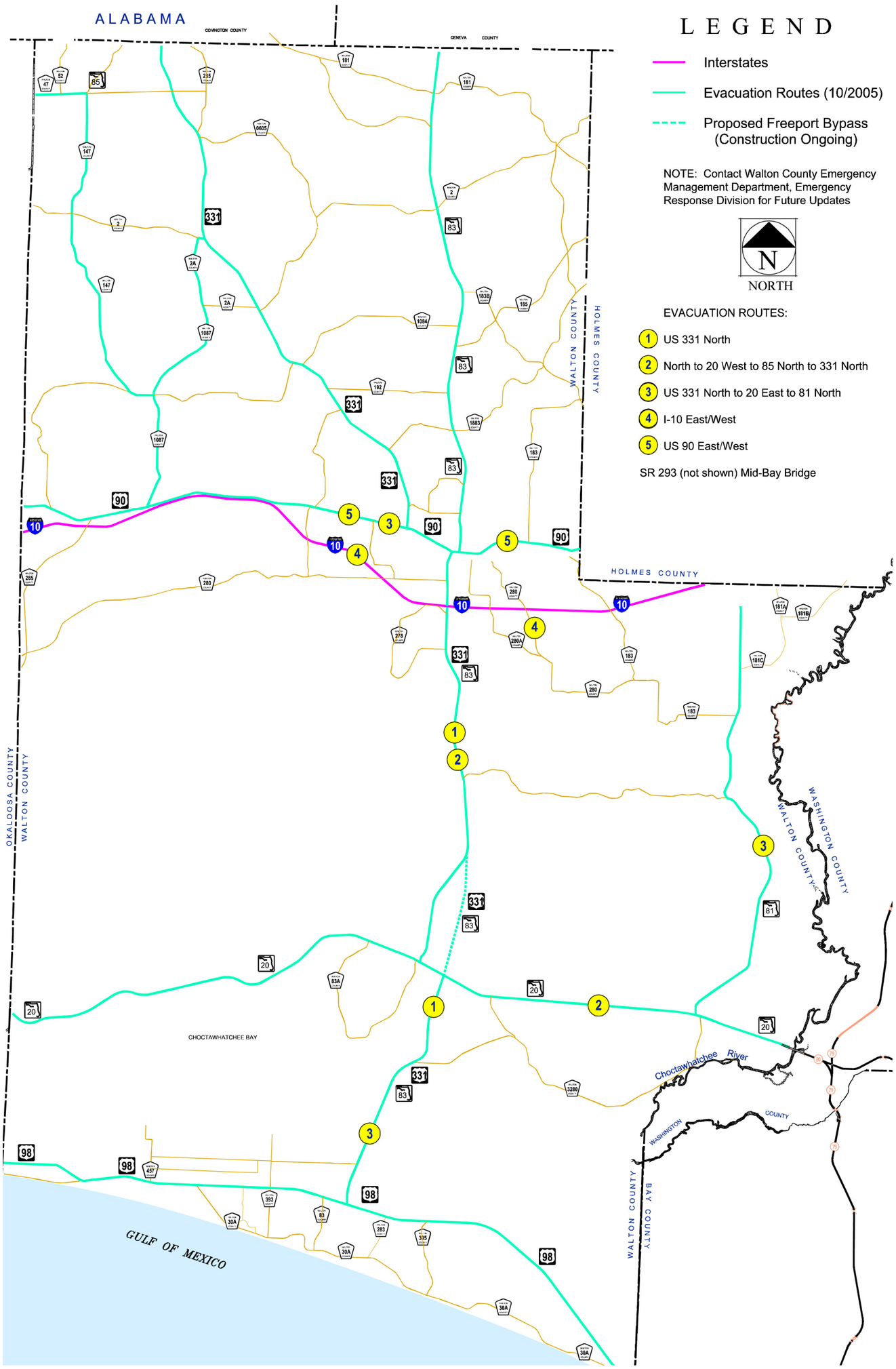

EXISTING CONDITIONS

Hurricane Evacuation Route

MAP A

Walton County, Florida CR 30-A Traffic Study

Appendix B

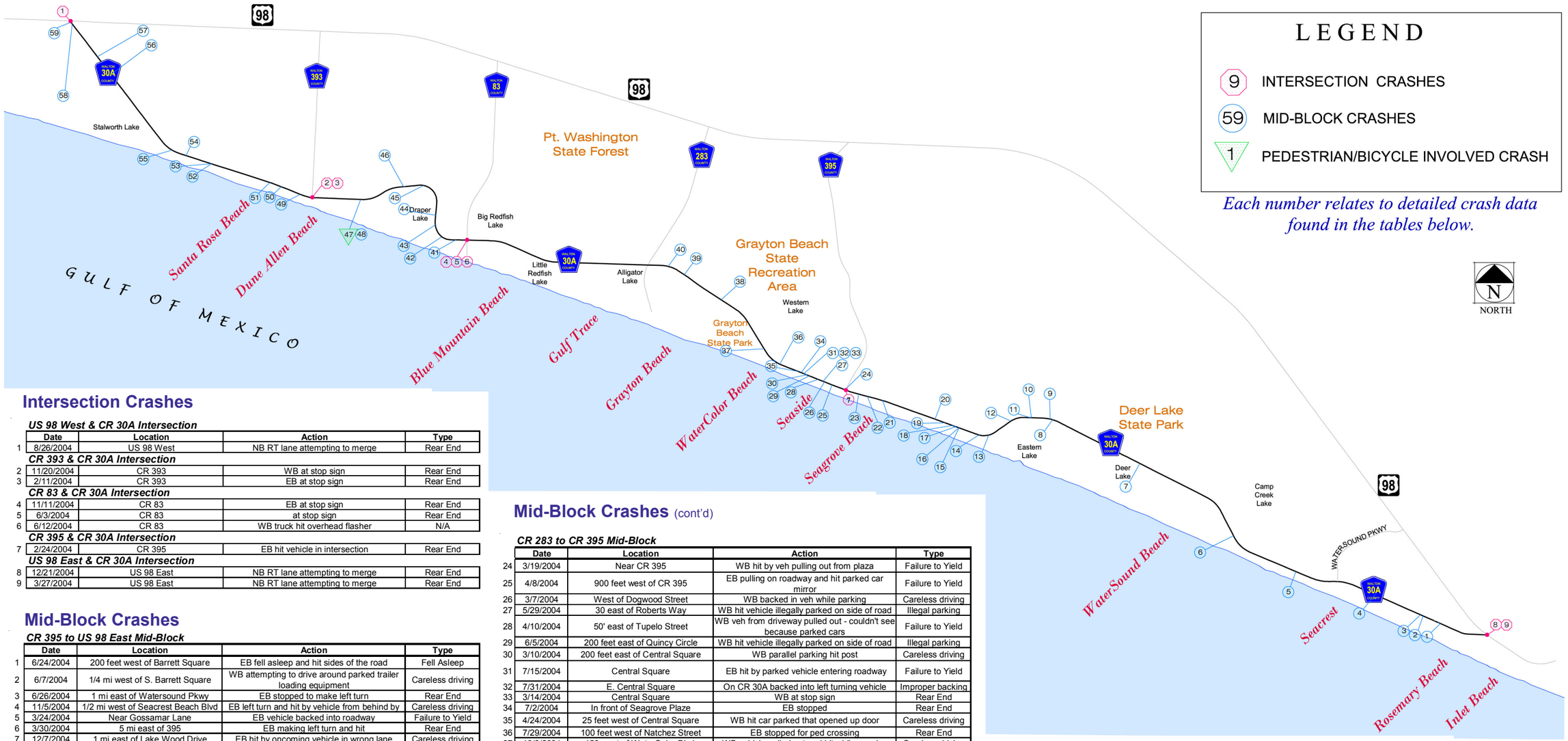

Intersection Crashes

	Date	Location	Action	Type
	US 98 West & CR 30A Intersection			
1	8/26/2004	US 98 West	NB RT lane attempting to merge	Rear End
	CR 393 & CR 30A Intersection			
2	11/20/2004	CR 393	WB at stop sign	Rear End
3	2/11/2004	CR 393	EB at stop sign	Rear End
	CR 83 & CR 30A Intersection			
4	11/11/2004	CR 83	EB at stop sign	Rear End
5	6/3/2004	CR 83	at stop sign	Rear End
6	6/12/2004	CR 83	WB truck hit overhead flasher	N/A
	CR 395 & CR 30A Intersection			
7	2/24/2004	CR 395	EB hit vehicle in intersection	Rear End
	US 98 East & CR 30A Intersection			
8	12/21/2004	US 98 East	NB RT lane attempting to merge	Rear End
9	3/27/2004	US 98 East	NB RT lane attempting to merge	Rear End

Mid-Block Crashes

CR 395 to US 98 East Mid-Block

	Date	Location	Action	Type
1	6/24/2004	200 feet west of Barrett Square	EB fell asleep and hit sides of the road	Fell Asleep
2	6/7/2004	1/4 mi west of S. Barrett Square	WB attempting to drive around parked trailer loading equipment	Careless driving
3	6/26/2004	1 mi east of Watersound Pkwy	EB stopped to make left turn	Rear End
4	11/5/2004	1/2 mi west of Seacrest Beach Blvd	EB left turn and hit by vehicle from behind by	Careless driving
5	3/24/2004	Near Gossamar Lane	EB vehicle backed into roadway	Failure to Yield
6	3/30/2004	5 mi east of 395	EB making left turn and hit	Rear End
7	12/7/2004	1 mi east of Lake Wood Drive	EB hit by oncoming vehicle in wrong lane	Careless driving
8	5/25/2004	500 feet west of Lakewood Drive	WB stopped for turning vehicle	Rear End
9	7/4/2004	Herons Watch Way	EB making left turn and hit	Rear End
10	4/23/2004	50 feet east of S. Lake Drive	Stealing and fleeing - hit sign	Criminal
11	11/4/2004	N. Lake Drive	EB 3 vehicles stopped all hit	Rear End
12	11/9/2004	200 west of Willian Street	WB object from mower hit vehicle	N/A
13	4/7/2004	600 feet east Elake Road	WB stopped to allow veh to make left turn	Rear End
14	2/10/2004	Sea Turtle Drive	WB stopped for unloading trailer	Rear End
15	5/21/2004	Cypress Grove Lane	EB stopped to make left turn	Rear End
16	7/2/2004	Cypress Grove Lane	WB making right turn and hit	Rear End
17	9/7/2004	25 east Robert Ellis Road	EB backed up illegally on CR 30A	Improper backing
18	10/25/2004	200 west of Robert Ellis Road	WB stopped to make left turn	Rear End
19	12/3/2004	Sugar Sand Lane	WB hit by vehicle pulling out	Failure to Yield
20	7/21/2004	30 feet west of Somerset Bridge Rd	EB stopped for ped crossing	Rear End
21	7/21/2004	30 feet west of Somerset Bridge Rd	EB stopped for ped crossing	Rear End
22	12/6/2004	1/4 mi east of CR 395	EB slowing for speed zone	Rear End
23	11/4/2004	800 feet east of CR 395	EB hit by veh backing onto roadway	Failure to Yield

Mid-Block Crashes (cont'd)

CR 283 to CR 395 Mid-Block

	Date	Location	Action	Type
24	3/19/2004	Near CR 395	WB hit by veh pulling out from plaza	Failure to Yield
25	4/8/2004	900 feet west of CR 395	EB pulling on roadway and hit parked car mirror	Failure to Yield
26	3/7/2004	West of Dogwood Street	WB backed in veh while parking	Careless driving
27	5/29/2004	30 east of Roberts Way	WB hit vehicle illegally parked on side of road	Illegal parking
28	4/10/2004	50' east of Tupelo Street	WB veh from driveway pulled out - couldn't see because parked cars	Failure to Yield
29	6/5/2004	200 feet east of Quincy Circle	WB hit vehicle illegally parked on side of road	Illegal parking
30	3/10/2004	200 feet east of Central Square	WB parallel parking hit post	Careless driving
31	7/15/2004	Central Square	EB hit by parked vehicle entering roadway	Failure to Yield
32	7/31/2004	E. Central Square	On CR 30A backed into left turning vehicle	Improper backing
33	3/14/2004	Central Square	WB at stop sign	Rear End
34	7/2/2004	In front of Seagrove Plaze	EB stopped	Rear End
35	4/24/2004	25 feet west of Central Square	WB hit car parked that opened up door	Careless driving
36	7/29/2004	100 feet west of Natchez Street	EB stopped for ped crossing	Rear End
37	10/3/2004	150 west of WaterColor Blvd.	WB vehicle pulled out and hit while passing	Careless driving
38	11/19/2004	1 mi east of CR 283	EB ran off road by WB	Careless driving
39	8/27/2004	1/2 mi east of CR 283	WB hit deer	Hit Deer
40	2/10/2004	Uptown Graton Circle	WB stopped for vehicle turning left	Rear End

CR 393 to CR 83 Mid-Block

	Date	Location	Action	Type
41	11/11/2004	1/8 mi west of CR 83	WB hit by veh pulling out from parking	Failure to Yield
42	4/8/2004	East of Flounder Street	EB veh from driveway pulling out	Failure to Yield
43	3/30/2004	1/2 mi west of CR 83	EB stopped for turning vehicle	Rear End
44	9/13/2004	Snapper Street	WB stopped to make left turn	Rear End
45	6/18/2004	3/4 mi west of CR 83	EB stopped for turning vehicle	Rear End
46	12/15/2004	100 west of Gulf Hills Drive	EB trying to pass on shoulder and lost control	Careless driving
*47	3/7/2004	Gulfview Heights	NB left turn into ped picking up trash in road	No fault
48	11/5/2004	Gulfview Heights	WB hit by truck w/ trailer sitting in road	Careless driving

Mid-Block Crashes (cont'd)

US 98 East to CR 393 Mid-Block

	Date	Location	Action	Type
49	6/1/2004	1/8 mi west of CR 393	WB stopped for peds	Rear End
50	2/10/2004	15 feet west of Seawinds Drive	WB stopped for school bus	Rear End
51	2/7/2004	1/2 mi west of CR 393	WB careless driving	Rear End
52	12/16/2004	1 mi east of Loon Drive	EB hit by deer	Hit Deer
53	7/8/2004	100 feet west Allen Loop Drive	EB stopped for traffic ahead	Rear End
54	5/29/2004	1/2 mi west of Oyster Lake	EB veh swirved to avoid other veh	Careless driving
55	10/27/2004	Highland Avenue	EB hit by vehicle pulling out	Failure to Yield
56	3/30/2004	3/2 mi south of SR 30	On CR 30A stopped to turn	Rear End
57	11/11/2004	3/4 mi south of SR 30	NB stopped for traffic ahead	Rear End
58	3/16/2004	200 feet east of SR 30	EB hit deer	Hit Deer
59	11/18/2004	South of 98 West	EB hit deer	Hit Deer

Pedestrian/Bicycle Involved Crash

* *(No. 47, Mid-Block Crashes)*

EXISTING CONDITIONS

MAP B

Crash Data (January 1 - December 31, 2004)

72-Hour Traffic Counts

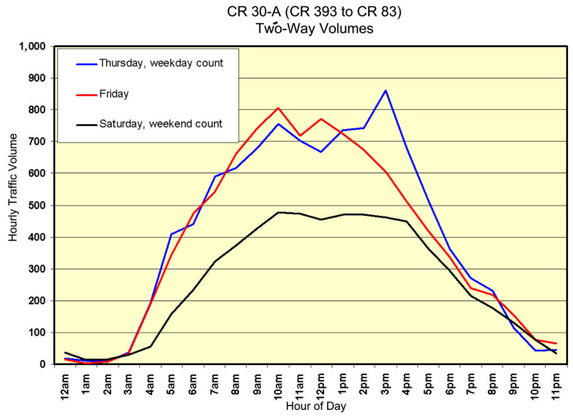

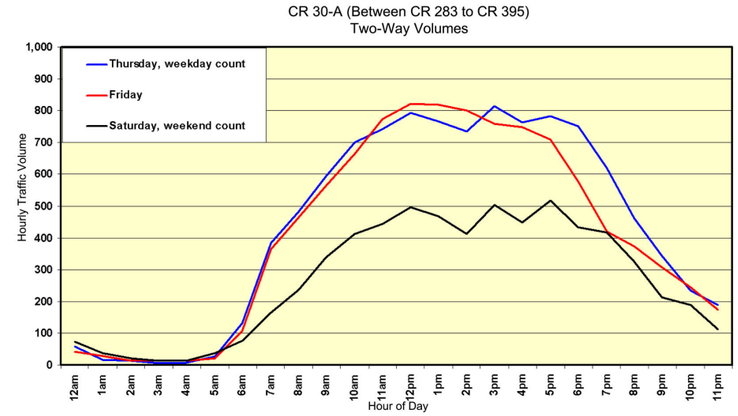

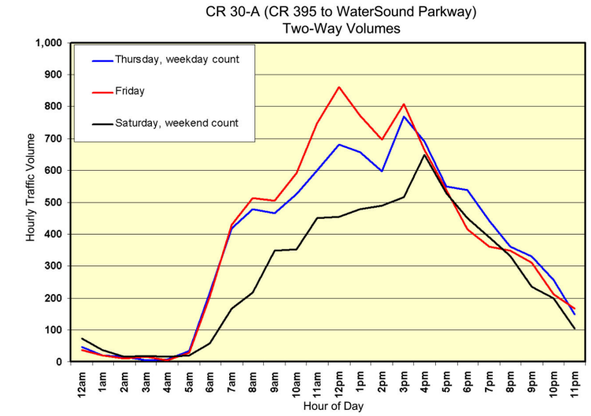

8-Hour Intersection Turning Movement Counts

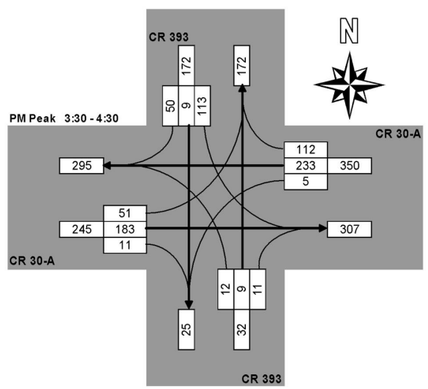

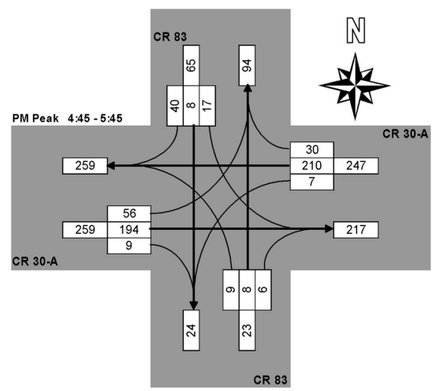

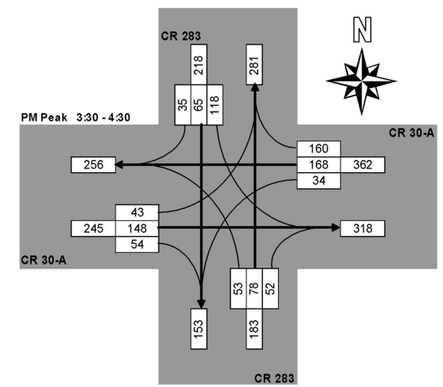

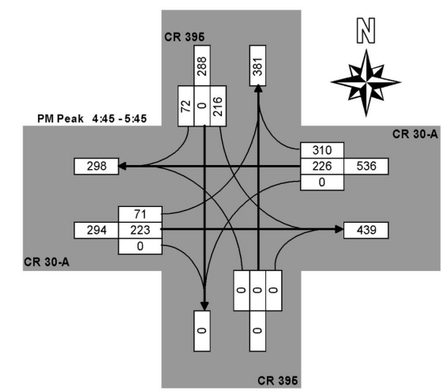

Vehicle Classification and Intersection Approach Counts

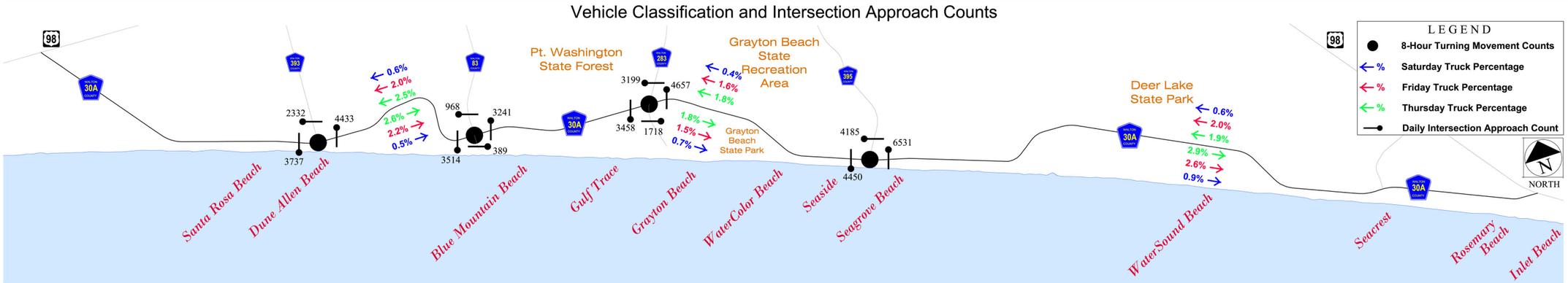

EXISTING CONDITIONS
Traffic Counts

MAP C

EXISTING CONDITIONS

MAP D Turn Lane and Median Locations

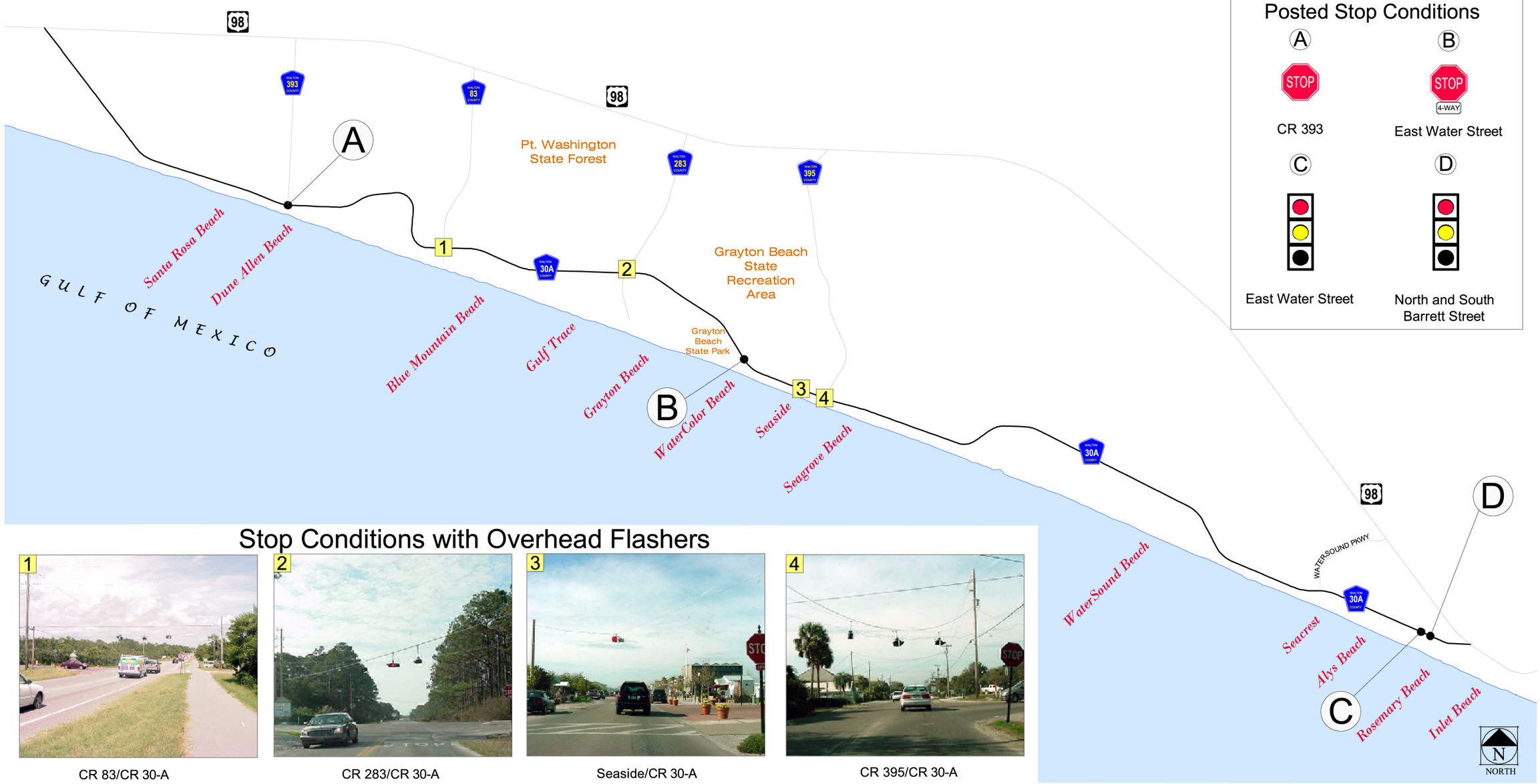

Stop Conditions with Overhead Flashers

1

CR 83/CR 30-A

2

CR 283/CR 30-A

3

Seaside/CR 30-A

4

CR 395/CR 30-A

EXISTING CONDITIONS

Posted Stop Sign and Overhead Flasher Conditions

MAP E

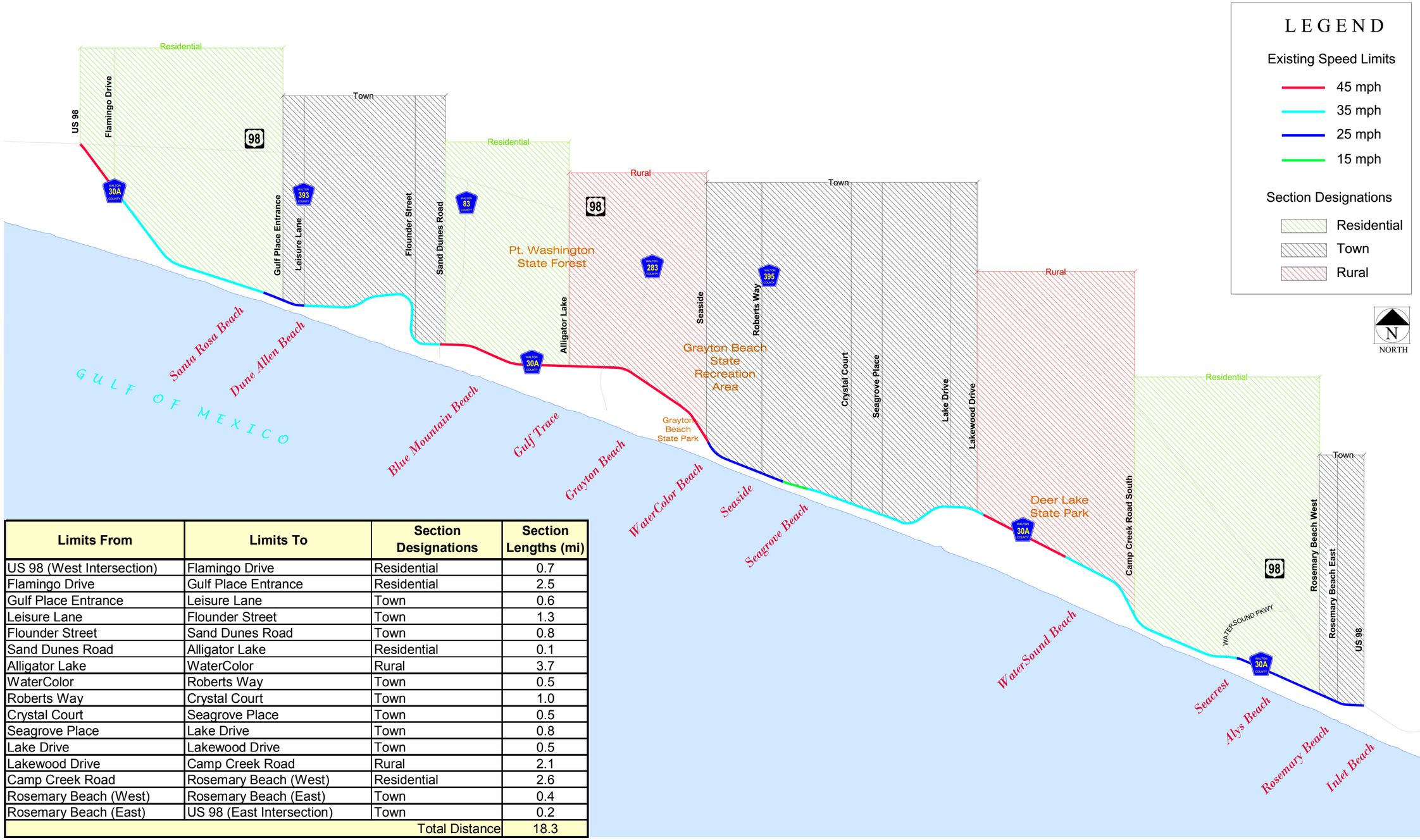

Limits From	Limits To	Section Designations	Section Lengths (mi)
US 98 (West Intersection)	Flamingo Drive	Residential	0.7
Flamingo Drive	Gulf Place Entrance	Residential	2.5
Gulf Place Entrance	Leisure Lane	Town	0.6
Leisure Lane	Flounder Street	Town	1.3
Flounder Street	Sand Dunes Road	Town	0.8
Sand Dunes Road	Alligator Lake	Residential	0.1
Alligator Lake	WaterColor	Rural	3.7
WaterColor	Roberts Way	Town	0.5
Roberts Way	Crystal Court	Town	1.0
Crystal Court	Seagrove Place	Town	0.5
Seagrove Place	Lake Drive	Town	0.8
Lake Drive	Lakewood Drive	Town	0.5
Lakewood Drive	Camp Creek Road	Rural	2.1
Camp Creek Road	Rosemary Beach (West)	Residential	2.6
Rosemary Beach (West)	Rosemary Beach (East)	Town	0.4
Rosemary Beach (East)	US 98 (East Intersection)	Town	0.2
		Total Distance	18.3

EXISTING CONDITIONS

MAP F Speed Limits and Roadway Section Designations

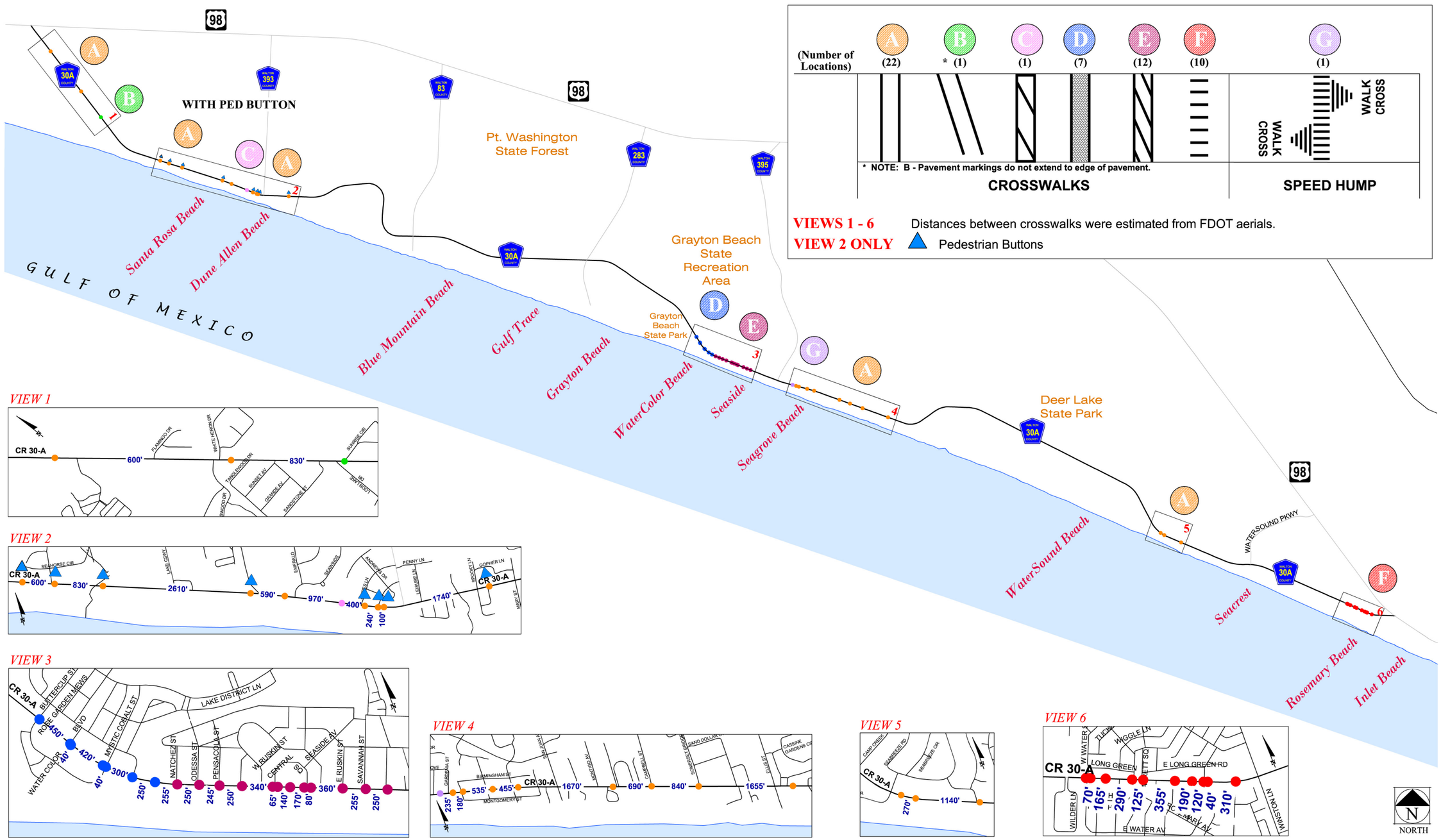

EXISTING CONDITIONS

Pedestrian Crosswalks Inventory

MAP G

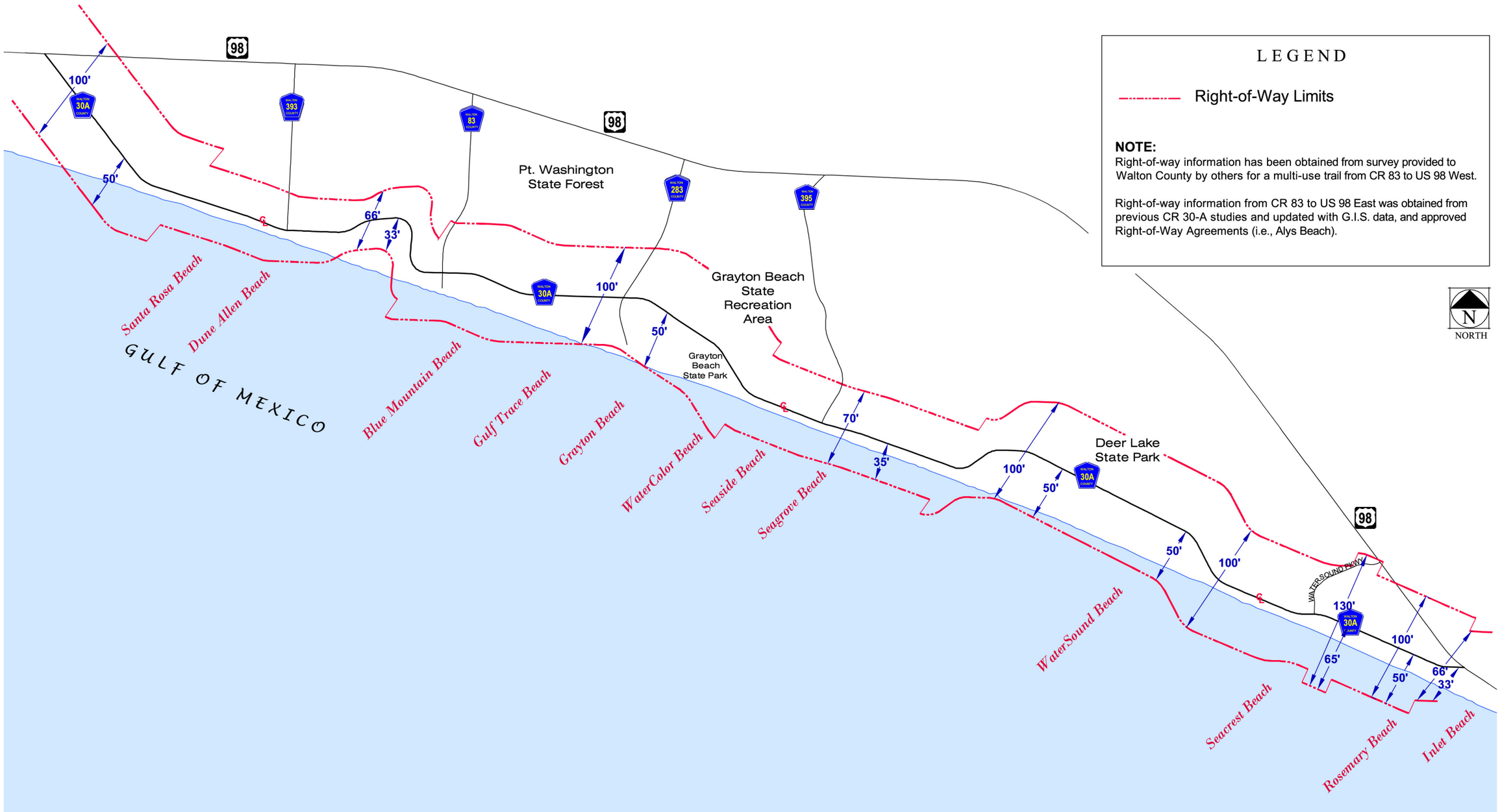

EXISTING CONDITIONS

MAP H Right-of-Way

TRAILS NOTE:
Several trails do not meet adequate lateral clearance distances from roadway. Modify to satisfy clear zone requirements.

SIDEWALK NOTE:
Town areas provide sidewalks with less than eight (8') foot wide multi-use trail (wider pedestrian amenities should be provided).

PARKING NOTE:
Existing on-street parking recommended to be modified to eliminate safety concerns and conflicts.

TRAILS

SIDEWALKS

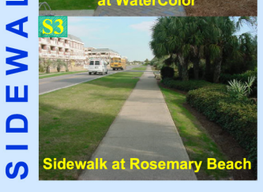

PARKING

EXISTING CONDITIONS
Trails, Sidewalks, and Parking

MAP I

EXISTING CONDITIONS
Utilities, Shoulders, Curb and Gutter

MAP J

Appendix B

EXISTING CONDITIONS
Beach Access

MAP K

Segment	Distance (miles)	Monday, April 25, 2005 Begin Time: 4:45 PM Direction: Westbound		Thursday, May 12, 2005 * Begin Time: 9:58 AM Direction: Westbound		Memorial Day Holiday: Monday, May 30, 2005 Begin Time: 1:10 PM Direction: Eastbound		Memorial Day Holiday: Monday, May 30, 2005 Begin Time: 2:00 PM Direction: Westbound		Memorial Day Holiday: Monday, May 30, 2005 Begin Time: 3:58 PM Direction: Eastbound		Memorial Day Holiday: Monday, May 30, 2005 Begin Time: 4:35 PM Direction: Westbound		Thursday, July 7, 2005 Begin Time: 2:45 PM Direction: Eastbound		Wednesday, July 20, 2005 Begin Time: 2:30 PM Direction: Eastbound		Wednesday, July 20, 2005 Begin Time: 3:10 PM Direction: Westbound		Average Speed (mph)
		Driving Time (Min:Sec)	Speed (mph)	Driving Time (Min:Sec)	Speed (mph)	Driving Time (Min:Sec)	Speed (mph)	Driving Time (Min:Sec)	Speed (mph)	Driving Time (Min:Sec)	Speed (mph)	Driving Time (Min:Sec)	Speed (mph)	Driving Time (Min:Sec)	Speed (mph)	Driving Time (Min:Sec)	Speed (mph)	Driving Time (Min:Sec)	Speed (mph)	
US 98E to CR 395	8.0	0:13:15	36.2	0:12:00	40.0	0:13:09	36.5	0:14:45	32.5	0:14:17	33.6	0:14:46	32.5	0:15:01	32.0	0:15:54	30.2	0:14:58	32.1	34.0
CR 395 to CR 283	2.7	0:04:55	32.9	0:06:00	27.0	0:08:28	19.1	0:06:56	23.4	0:06:24	25.3	0:05:50	27.8	0:06:31	24.9	0:07:05	22.9	0:05:35	29.0	25.8
CR 283 to CR 83	2.0	0:02:30	48.0	0:03:00	40.0	0:02:51	42.1	0:03:15	36.9	0:03:11	37.7	0:02:55	41.1	0:02:52	41.9	0:03:08	38.3	0:02:49	42.6	41.0
CR 83 to CR 393	2.3	0:03:50	36.0	0:04:00	34.5	0:03:35	38.5	0:04:02	34.2	0:04:17	32.2	0:03:12	43.1	0:03:58	34.8	0:03:30	39.4	0:03:34	38.7	36.8
CR 393 to US 98W	3.4	0:05:35	36.5	0:15:00	13.6	0:05:43	35.7	0:06:17	32.5	0:05:49	35.1	0:05:39	36.1	0:05:16	38.7	0:05:29	37.2	0:05:47	35.3	33.4
CR 30-A Total	18.4	0:30:05	36.7	0:40:00	27.6	0:33:46	32.7	0:35:15	31.3	0:33:58	32.5	0:32:22	34.1	0:33:38	32.8	0:35:06	31.5	0:32:43	33.7	32.5

* Construction ongoing between CR 393 and US 98W

EXISTING CONDITIONS

CHART 1 Travel Time Analysis

Traffic Control Signs and Flashing Beacons

Road Sign General Location		R2-1 (45)	R2-1 (35)	R2-1 (25)	R2-1 (15)	R2-6A	W11-1	W11-2	n/a	S1-1	W1-2L	W1-2R	W3-1	W3-1A	W3-3	W5-2	W5-2A	W5-1	W8-1	W16-9p	S3-1	R4-7	n/a	n/a	n/a	n/a	n/a	n/a	S5-2	R1-2	W13-1 (30)	W13-1 (40)	S5-1	R1-1	R1-3	R1-3A	R1-4
CR 30-A Section Southside (Eastbound)																																					
A	US 98 W to CR 393	1	3	2			6	4		1	1			1												1			1				1	1	1		
B	CR 393 to CR 83													1																				1	1		
C	CR 83 to CR 283	1												1																				1	1		
D	CR 283 to CR 395	1	1	1		1		1					1	1			3	1									1					1		3	1		
E	CR 395 to US 98 E	2	9	2	1	1		15			4	2			1				1	1	1		1	3						1	1			2	1		
	CR 30-A Section Northside (Westbound)																																				
F	US 98 E to CR 395	2	12	2	1	1		16	2		1	2						1	1		1	3	1	3	2					1				3	1	1	
G	CR 395 to CR 283			2				2			2		2			1	1	2														1		3	2	1	
H	CR 283 to CR 83	2											1	1																				1	1		
I	CR 83 to CR 393		3				3	1			1	1		1														1						1	1		
J	CR 393 to US 98 W	1	2	1			4	2		1		1			1											1			1				1				
Total		10	30	10	2	3	13	41	2	2	9	6	4	6	2	1	4	4	2	1	2	3	2	6	2	2	1	1	2	2	1	2	2	16	10	2	0

* Note: Distances from major roadways to sign posts are available if needed, and were approximately identified using Distance Measuring Instrument (DMI) equipment.

'Combination Signs'

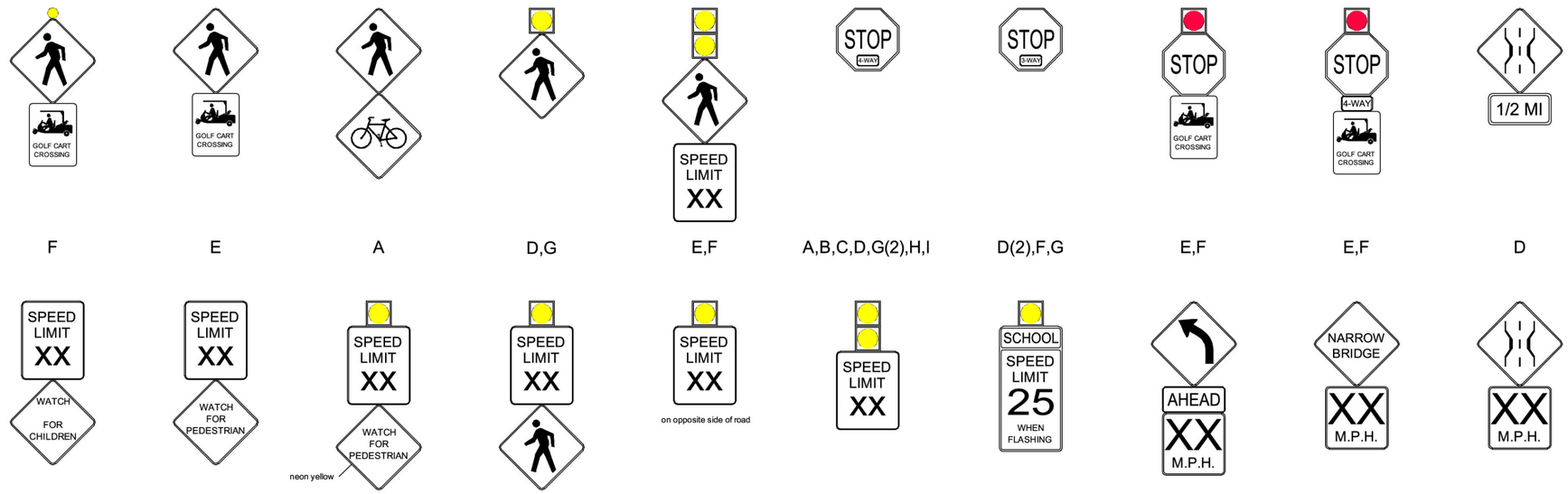

F E A D,G E,F A,B,C,D,G(2),H,I D(2),F,G E,F E,F D

F F F G E A(2) A E G D

EXISTING CONDITIONS

Sign Inventory

CHART 2

Appendix B